Schutzvermerk nach DIN34 beachten

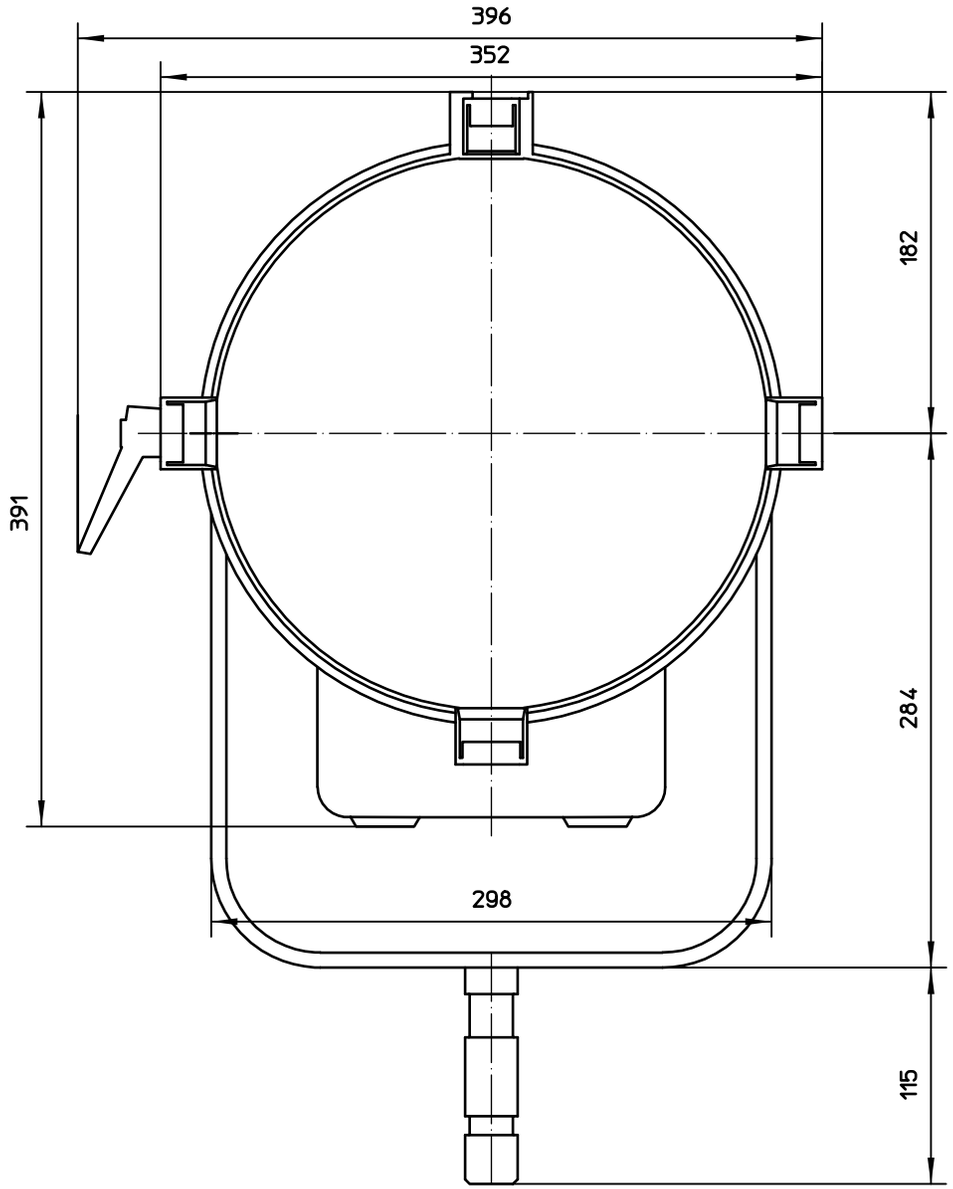

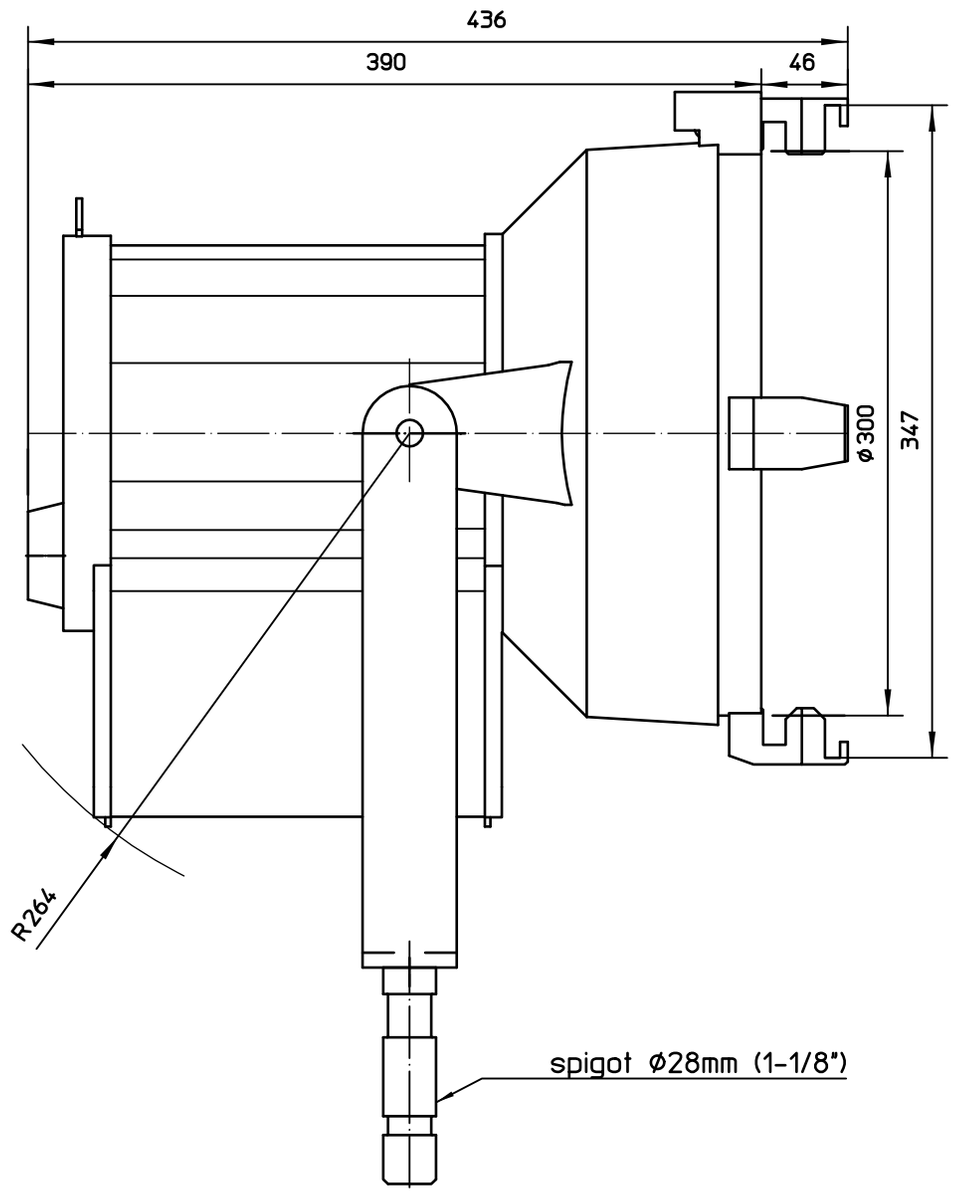

Scheinwerfertyp type of lamphead	ARRISUN 12 EVENT	Linsen lenses	Ø 255 mm Ø 10 "	Packmass packed size	530x530x620 mm 20.87x20.87x24.41 "	Gewicht net weight	13 kg 26 lbs	ARRI Arnold & Richter Cine Technik Pulvermuehle D-83071 Stephanskirchen
Leuchtmittel lamp	HMI 1200W/SE	Zubehoer accessories	Ø 330 mm Ø 13 "	Packvolumen packed volume	174.16 l 6.150 ft3	Dateiname file name	ase12_mb_02	
Lampensockel lamp base	G38	Fluegeltor barndoor	Ø 344 mm Ø 13.5 "	Packgewicht packed weight	16.5 kg 36.38 lbs	Version / Stand version / as at...	1.1/11.07.06	