Schutzvermerk nach DIN34 beachten

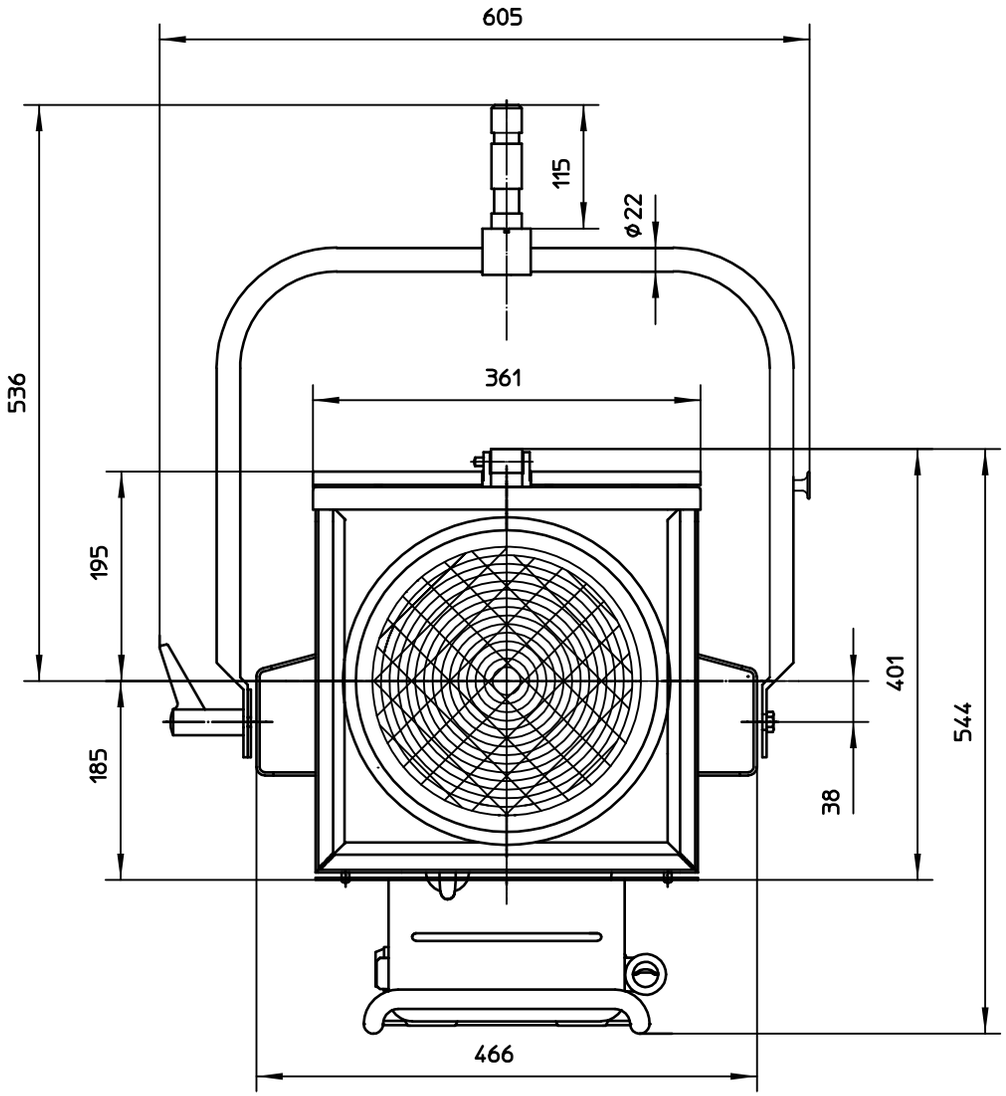

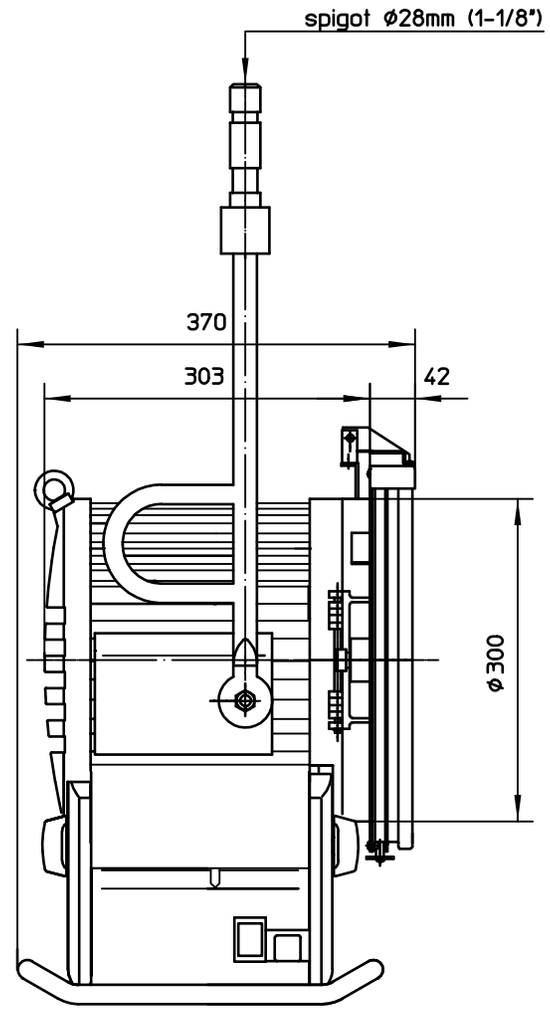

Scheinwerfertyp type of lamphead	Compact 2500 Theater	Linsen lenses	ø 250 mm ø 9.8 "	Packmass packed size	670x610x620 mm 26.38x24.02x24.41 "	Gewicht net weight	23 kg 50.7 lbs	ARRI Arnold & Richter Cine Technik Pulvermuehle D-83071 Stephanskirchen
Leuchtmittel lamp	HMI 2500W/SE	Zubehoer accessories	ø 330 mm ø 13 "	Packvolumen packed volume	253.39 l 8.949 ft3	Dateiname file name	c2500t_mb_02	
Lampensockel lamp base	G38	Fluegeltor barndoor	ø 344 mm ø 13.5 "	Packgewicht packed weight	27 kg 59.52 lbs	Version / Stand version / as at...	1.1/11.07.06	